9. BASIC STRUCTURE OF FBJ

PLUMMER BLOCK HOUSINGS
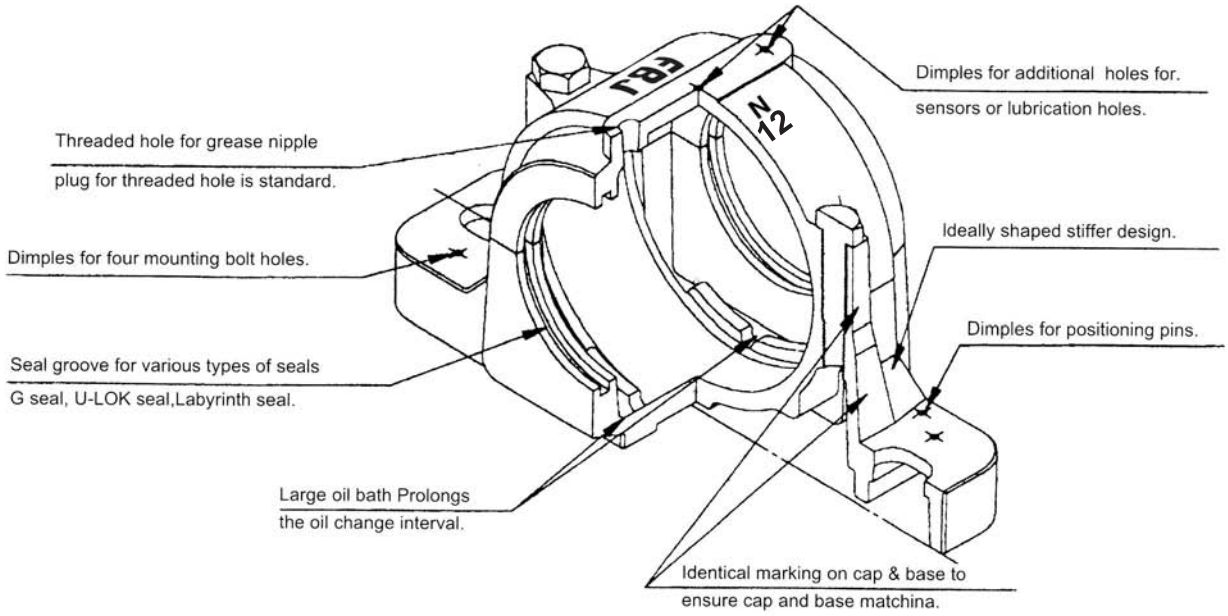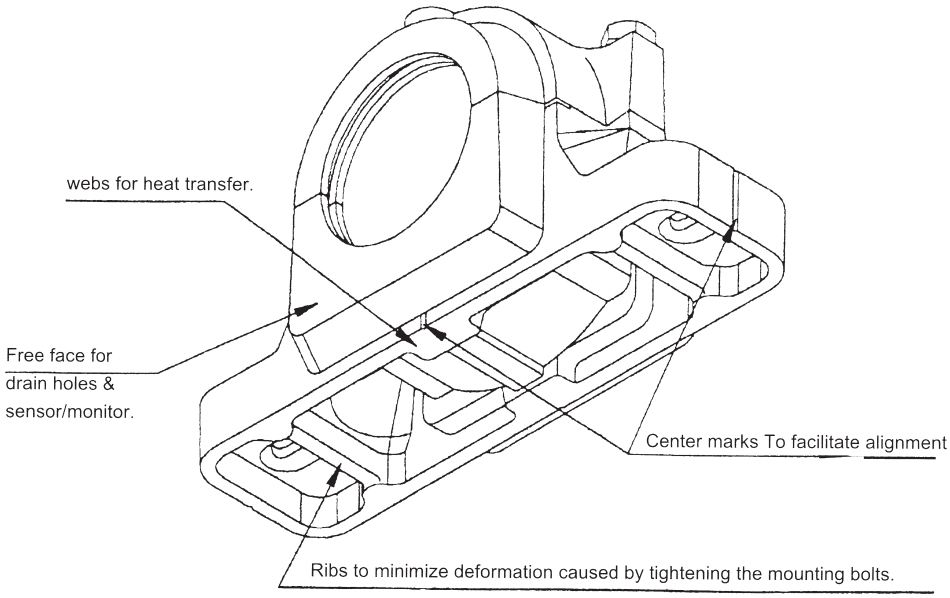
STRUCTURE OF PLUMMER BLOCK HOUSINGS